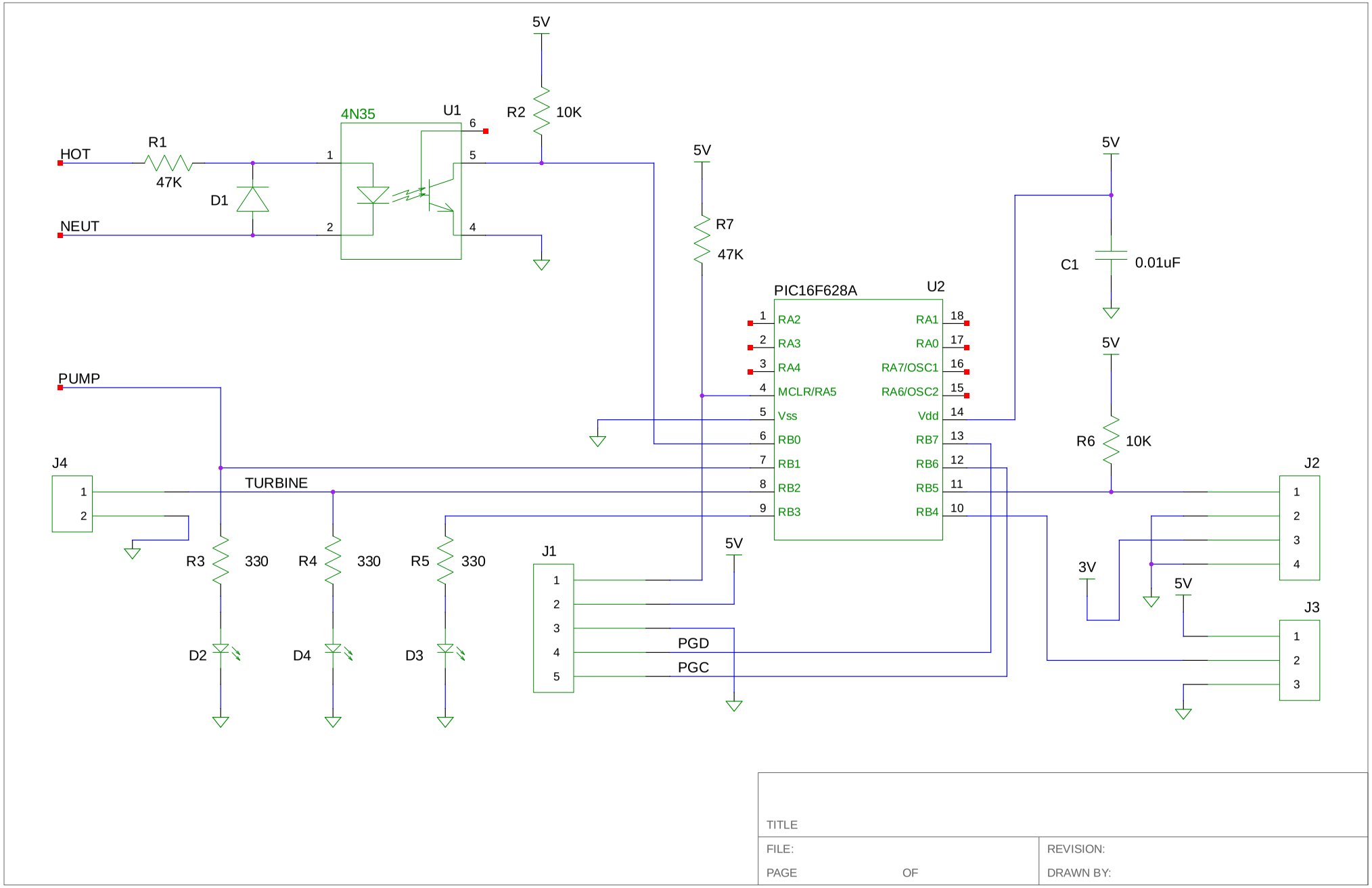
5V
R2
10K
4N35
U1
HOT
R1
47K
D1
NEUT
5V
R7
47K
5V
C1
0.01uF
PIC16F628A
U2
RA2
RA3
RA4
MCLR/RA5
Vss
RB0
RB1
RB2
RB3
RA1
RA0
RA7/OSC1
RA6/OSC2
Vdd
RB7
RB6
RB5
RB4
5V
R6
10K
PUMP
J4
TURBINE
J2
R3
330
R4
330
R5
330
J1
5V
3V
5V
J3
D2
D4
D3
PGD
PGC
TITLE
FILE:
REVISION:
PAGE
OF
DRAWN BY: